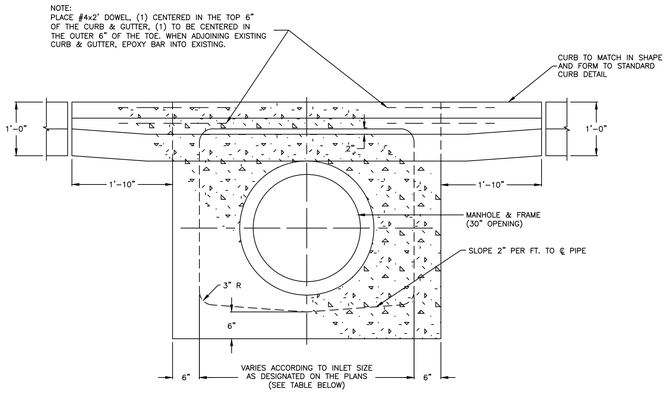

TYPE INLET	INSIDE DIMENSIONS
B-5	5'(length) x 2'(wide) w/Exception of side ejection SEE DETAIL
B-10	10'(length) x 10'(wide) w/Exception of side ejection SEE DETAIL
B-15	15'(length) x 5'(wide) w/Exception of side ejection SEE DETAIL
B-20	20'(length) x 10'(wide) w/Exception of side ejection SEE DETAIL
B-25	25'(length) x 5'(wide) w/Exception of side ejection SEE DETAIL
B-30	30'(length) x 10'(wide) w/Exception of side ejection SEE DETAIL

SECTION A-A

NOT TO SCALE

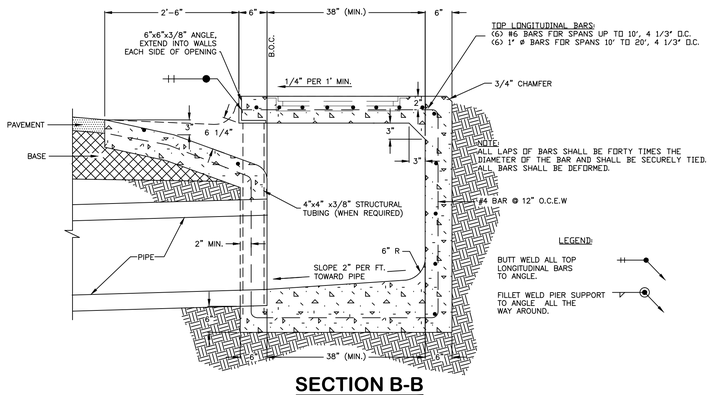

SECTION B-B

NOT TO SCALE

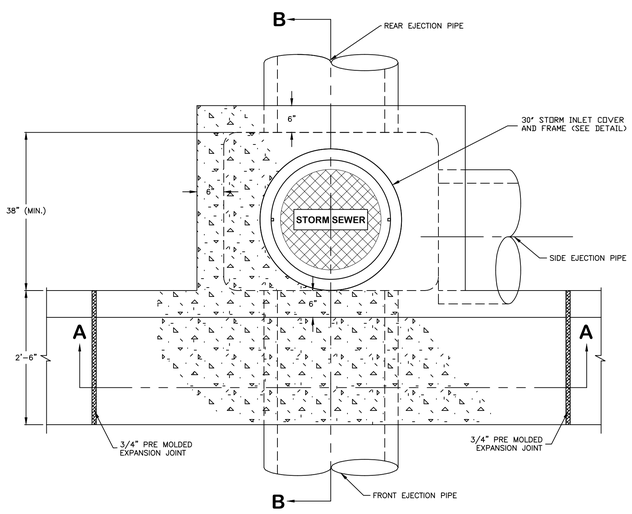

STANDARD BOX FOR STORM SEWER INLETS

NOT TO SCALE

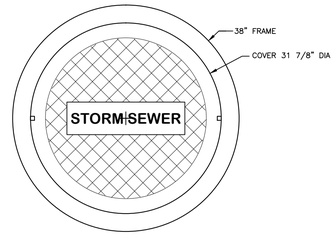

PLAN

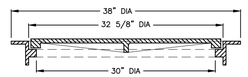

ELEVATION

FRAME AND COVER DETAIL

NOT TO SCALE

STORM SEWER NOTES:

1. CURB & GUTTER AND INLET SHALL BE TIED TOGETHER WITH TWO #4 BARS TWO FEET (2') LONG. ONE BAR SHALL BE CENTERED IN THE TOP SIX INCHES (6") OF THE CURB & GUTTER AND THE OTHER SHALL BE CENTERED IN THE OUTER SIX INCHES (6") OF THE TOE.
2. PRECAST INLETS ARE ACCEPTABLE SUBJECT TO CITY REVIEW AND APPROVAL. IF PRECAST INLETS ARE SUBMITTED THEY SHALL HAVE THE SAME THROAT DETAIL AS THAT SHOWN, BE DESIGNED FOR HS-25 WHEEL LOADING, AND HAVE A GALVANIZED STEEL ANGLE ON THE CURB FACE. SUBMITTALS SHALL BE DETAILED AND DOCUMENTED TO INDICATE COMPLIANCE WITH LOADINGS AND PHYSICAL PROPERTIES.
3. MANHOLE FRAME AND COMPOSITE COVER SHALL BE EQUIPPED WITH A SECURABLE LID WITH A MINIMUM OF TWO (2) STAINLESS STEEL BOLTS COUNTERSUNK INTO LID AND THREADED INTO FRAME.
4. AT CULVERT HEADWALL SAFETY END TREATMENTS, REFER TO CURRENT TxDOT REQUIREMENTSAND DETAILS,

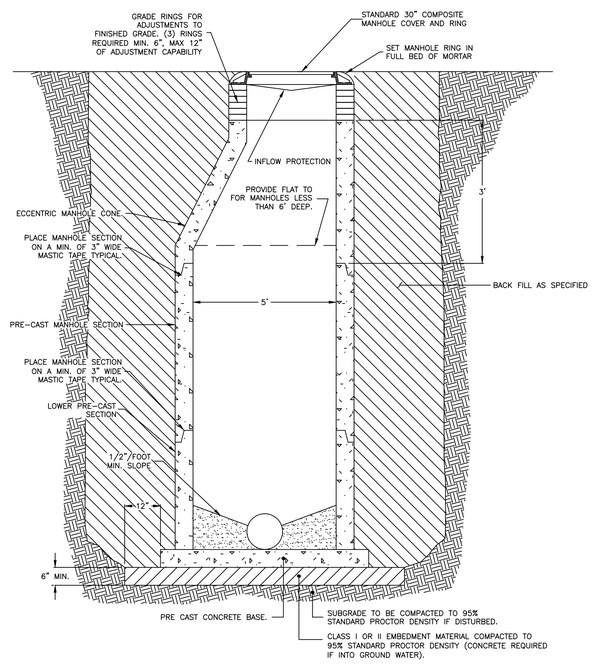

PRECAST STORM SEWER MANHOLE

NOT TO SCALE

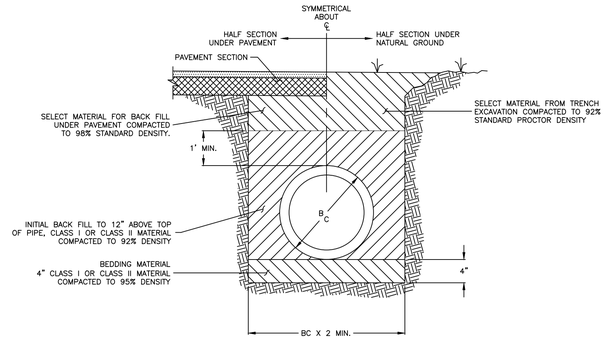

TYPICAL CMP STORM SEWER TRENCH DETAIL

NOT TO SCALE

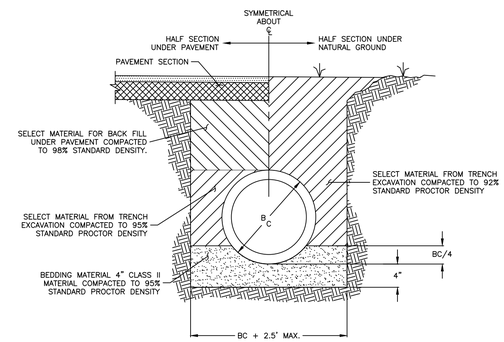

TYPICAL RCP STORM SEWER TRENCH DETAIL

NOT TO SCALE

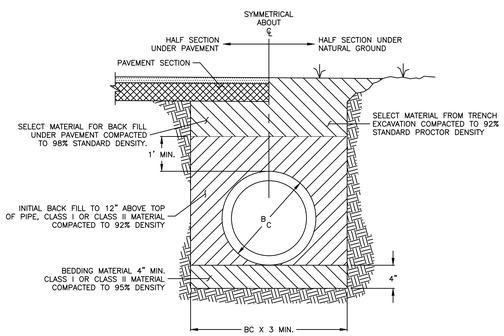

TYPICAL HDPE STORM SEWER TRENCH DETAIL

NOT TO SCALE

city of CANYON
TEXAS
301 16TH STREET 806.655.3014 CANYON, TEXAS 79015

STANDARD DETAILS
STORM SEWER

REVISIONS:

DATE: 09.09.09

SHEET 1 OF 1

SHEET NO: 1